Olympus UPLXAPO 20X Objective

See More by Olympus

Olympus UPLXAPO 20X Objective, #14-907

Stock **#14-907** **3 In Stock**

- 1 + **£3,624**.00

ADD TO CART

Volume Pricing	
Qty 1+	**£3,624.00** each
Need More?	Request Quote

Prices shown are exclusive of VAT/local taxes

Product Downloads

SPECIFICATIONS

General

Model Number:
UPLXAPO20X

Compatible Tube Lens Focal Length (mm):
Focal Length: 180mm

Type:	Microscope Objective
Style:	Infinity Corrected
Manufacturer:	Olympus
Note:	Spring-loaded

Physical & Mechanical Properties

Field of View (mm):	1.33
Length excluding Threads (mm):	44.45
Maximum Diameter (mm):	28
Weight (g):	149

Optical Properties

Compatible Cover Glass Thickness (mm):	0.17
Focal Length FL (mm):	9.00
Magnification:	20X
Numerical Aperture NA:	0.80
Resolving Power (µm):	0.42
Depth of Field (µm):	0.43
Working Distance (mm):	0.61
Wavelength Range (nm):	400 - 1000
Field Number (mm):	26.5
Parfocal Length (mm):	45.06
Immersion Liquid:	N/A

Threading & Mounting

Mounting Threads:	RMS / 20.32mm x 36 TPI

Regulatory Compliance

Certificate of Conformance:	View

PRODUCT DETAILS

- High Numerical Aperture (NA) up to 1.45
- Chromatic Aberration Correction from 400 - 1000nm
- Uniform Image Flatness over Large FOVs

Olympus X-Line Extended Apochromat Infinity Corrected Objectives (also referred to as the UPLXAPO series) are Olympus' next generation high performance objectives that simultaneously feature high numerical aperture (NA), broadband chromatic aberration correction, and excellent image flatness. The high numerical aperture (NA) allows for excellent light collection efficiency to better capture faint signals, enabling a shorter exposure time and higher contrast. The broad chromatic aberration correction compensates for the wavelength-dependent spatial shift of colors to achieve excellent color reproduction. These objectives also achieve high image flatness from the center to the edges of images over large fields of view (FOV), making them ideal for image stitching and quantitative image analysis. Olympus X-Line Extended Apochromat Infinity Corrected Objectives are used in demanding life science and clinical applications including pathology, fluorescence microscopy, multicolor or widefield fluorescence imaging, confocal or super resolution microscopy, and whole slide imaging.

TECHNICAL INFORMATION

#14-907

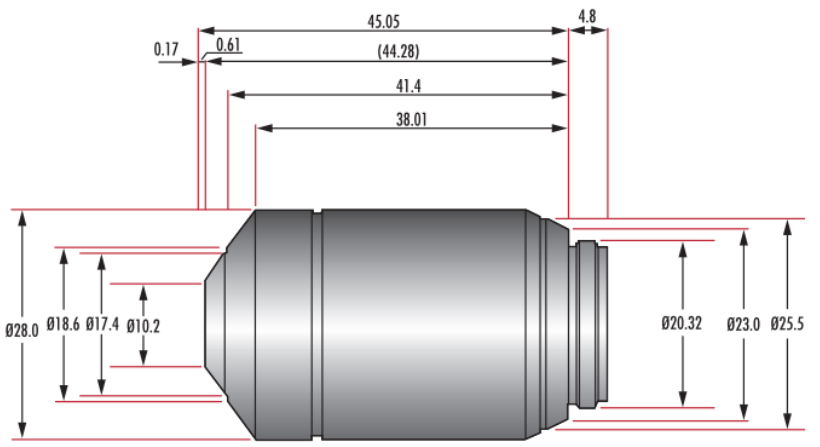

Units: mm

#14-907

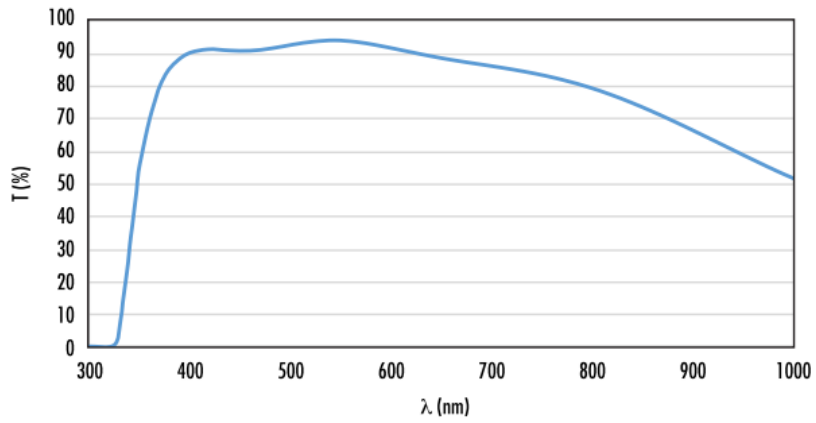
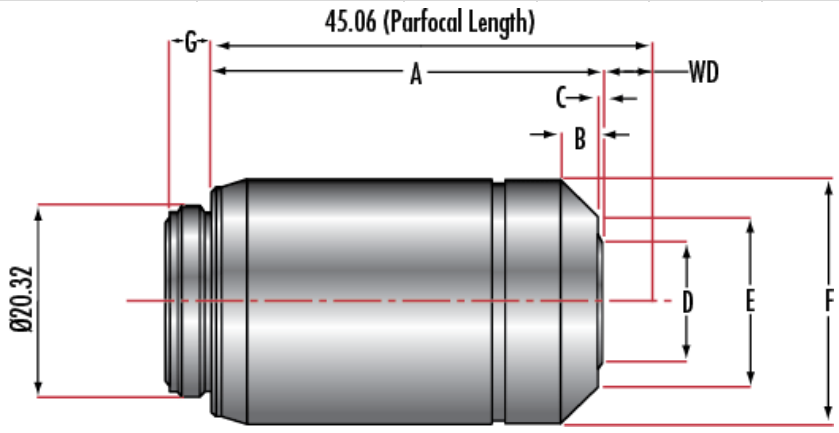
	Stock #	A	B	C	D	E	F	G	WD
Olympus UPLXAPO 4X Objective	#14-905	31.89	-	-	15.4	15.4	28	4.7	13.0
Olympus UPLXAPO 10X Objective	#14-906	41.78	3.7	4.28	9.6	19.4	28	4.6	3.1
Olympus UPLXAPO 20X Objective	#14-907	44.28	3.39	2.88	10.2	18.6	28	4.8	0.61
Olympus UPLXAPO 40X Objective	#14-908	44.71	4.21	2.11	7.5	20.3	31.5	4.9	0.18
Olympus UPLXAPO 60X Oil Immersion Objective	#14-909	44.74	2.1	2.84	10	19.3	31.5	4.9	0.15
Olympus UPLXAPO 100X Oil Immersion Objective	#14-910	44.76	2.1	3.06	7.5	19.1	30.5	4.8	0.135