See all 7 Products in Family

Mounted Window for 800nm, 0.80 NA, aplanoXX Aplan Objective

See More by AdlOptica

Mounted Window

Stock **#19-496** CONTACT US

- 1 + **£255**.00

ADD TO CART

Volume Pricing	
Qty 1+	**£255.00** each
Need More?	Request Quote

Prices shown are exclusive of VAT/local taxes

Product Downloads

General

Model Number:
Window in Holder L9333.06 (+D12 800)

Type:
Mounted Window

Note:
Protective window for #19-492

Physical & Mechanical Properties

Length (mm):	4.40
Clear Aperture CA (mm):	8
Diameter (mm):	29.50

Optical Properties

Design Wavelength DWL (nm):	800
Wavelength Range (nm):	770 - 900
Damage Threshold, By Design:	25 mJ @ 5ns
Damage Threshold, Pulsed:	25 mJ @ 5ns

Regulatory Compliance

RoHS 2015:	Compliant
Certificate of Conformance:	View
Reach 250:	Compliant

Product Details

- Aplanatic Optical Design
- High Numerical Aperture for Small Spot Sizes
- Designs for 800 and 1030nm with Focusing Depth Up to 4mm
- **AdlOptica foXXus Multi-Focus Objectives** Also Available

AdlOptica aplanoXX Aplan Objectives compensate for spherical aberration and coma when focusing into glass, sapphire, silicon carbide, silicon, PMMA, and other transparent materials at depths up to 4mm. These objectives are designed to be used with ultrafast solid-state and fiber lasers and are optimized for 800nm (Ti:sapphire) and 1030nm (Yb:doped). Featuring C-Mount threading and an optical design insensitive to misalignment, these objectives are easy to integrate into laser systems. AdlOptica aplanoXX Aplan Objectives are ideal for micromachining glass, 3D nanofabrication, waveguide recording, and selective laser etching. A collar on the objective allows for manual adjustment of focus and a replaceable front window protects from debris during materials processing.

Technical Information

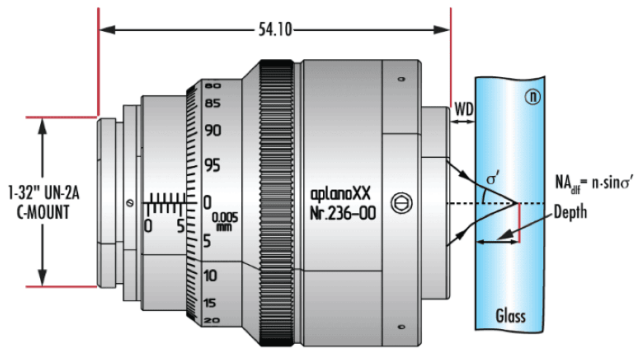

;