See all 16 Products in Family

50mm Width, Dovetail Carrier

50mm Width, Dovetail Carrier, #55-341

Stock **#55-341** **20+ In Stock**

- 1 + **£94.40**

ADD TO CART

Volume Pricing	
Qty 1-4	**£94.40** each
Qty 5+	**£90.00** each
Need More?	Request Quote

Prices shown are exclusive of VAT/local taxes

Product Downloads

General

Type:
Metric

Note:
Carrier

Physical & Mechanical Properties

Type of Movement:
Linear (X)

Guide System:
Dovetail

Length (inches):
2

Length (mm):
50.80

Construction:
Black Anodized Aluminum

Hardware & Interface Connectivity

Type of Drive:
Manual

Threading & Mounting

Mounting Threads:
(1) M16 x 1.0, (4) M3 x 0.5, (4) M2 x 0.4

Regulatory Compliance

RoHS 2015:
Compliant

Certificate of Conformance:
View

REACH 241:
Compliant

Product Details

- Wide Range of Carrier Length and Mounting Hole Options Available
- Low Profile Design with Smooth Movement
- Increased Stability and <1mrad Straight Line Accuracy

Dovetail Optical Rail Systems are designed for easy and stable installation and positioning of various optical components along the same axis. The rails feature slotted holes that allow them to be fixed to standard ¼-20 TPI and M6 breadboards or optical tables. Carriers are available with different lengths and hole patterns to meet various mounting needs including options that are directly compatible with our TECHSPEC® Manual Stages for precision alignment. Carriers utilize a unique two-piece design to prevent the locking screws from contacting the rail and to allow easy attachment and removal. All Dovetail Optical Rail System parts are constructed of black anodized aluminum to minimize stray reflections or glare.

Note: Rails and carriers are sold separately.

Technical Information

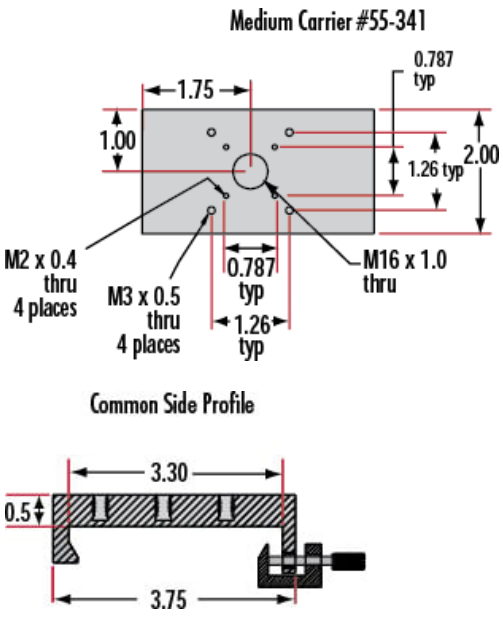

Stock No.	L	A	B	C	D	# Slots	# C'bores
#54-401	12	6	4	—	—	3	—
#54-402	36	18	16	4	6	5	2

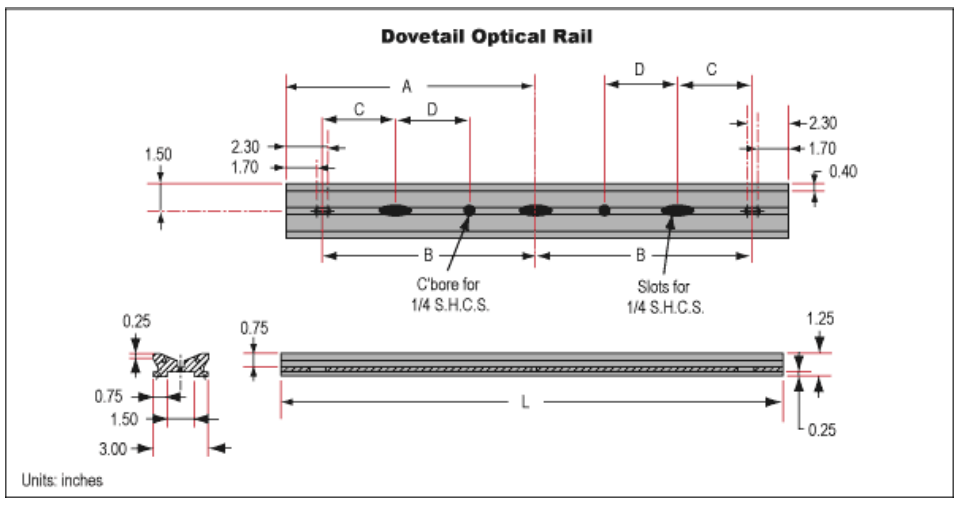

;