See all 195 Products in Family

TECHSPEC 50.8mm Dia. x 200mm FL, 532nm Coated, Laser Grade PCX Lens

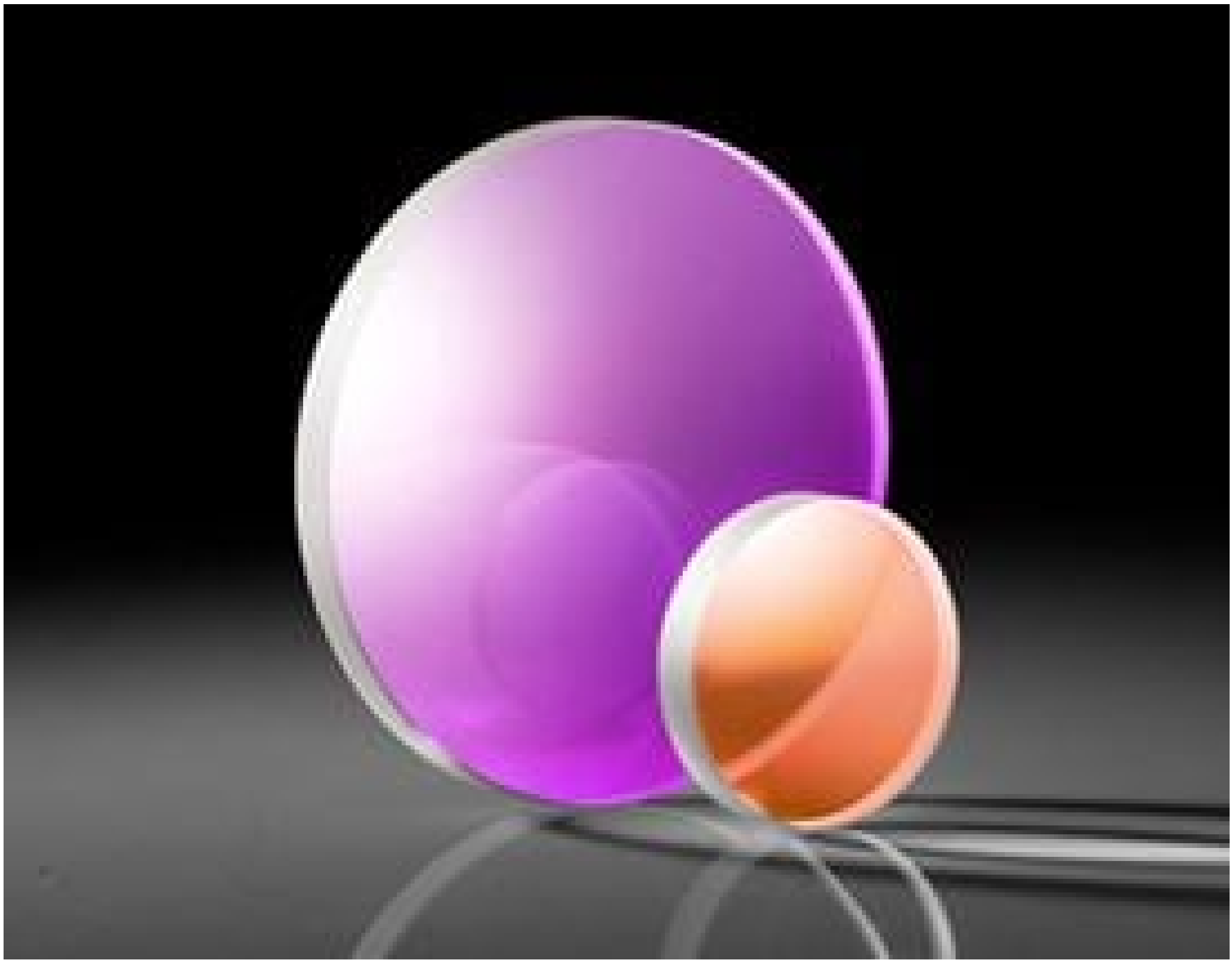

TECHSPEC Laser Grade PCX Lenses

Stock **#70-035** **13 In Stock**

Other Coating Options

- 1 + **£350.40**

ADD TO CART

Volume Pricing	
Qty 1-5	**£350.40** each
Qty 6-25	**£280.00** each
Qty 26-49	**£256.80** each
Need More?	Request Quote

Prices shown are exclusive of VAT/local taxes

Product Downloads

General

Type:
Plano-Convex Lens

Physical & Mechanical Properties

Diameter (mm):
50.80 +0.00/-0.025

Centering (arcmin):
<1

Center Thickness CT (mm):
8.00

Edge Thickness ET (mm):
4.41

Clear Aperture CA (mm):
45.72

Bevel:
Protective as needed

Optical Properties

Effective Focal Length EFL (mm):
200.00 @ 355nm

Back Focal Length BFL (mm):
194.515

Coating:
Laser V-Coat (532nm)

Coating Specification:
R_{abs} <0.25% @ 532nm

Substrate:
Fused Silica (Corning 7980)

Surface Quality:
10-5

Power (P-V) @ 632.8nm:
λ

Irregularity (P-V) @ 632.8nm:
λ/10 ±1

Radius R_1 (mm):
91.69

f/#:
3.94

Numerical Aperture NA:
0.13

Design Wavelength DWL (nm):
532

Damage Threshold, By Design:
10 J/cm^2 @ 532nm, 20ns, 20Hz

Regulatory Compliance

Certificate of Conformance:
View

Product Details

- Guaranteed Laser Damage Threshold
- 10-5 Surface Quality
- λ/10 Surface Accuracy

TECHSPEC® Laser Grade PCX Lenses are designed for high energy Nd:YAG laser applications including laser cutting, machining, and welding. The precision fused silica substrate, featuring λ/10 surface accuracy and 10-5 surface quality, ensures low scatter and excellent transmitted wavefront performance. TECHSPEC® Laser Grade PCX Lenses are available uncoated or with a variety of high laser damage threshold anti-reflection (AR) coating options. Coatings are available at the most common Nd:YAG laser wavelengths to ensure maximum laser throughput.

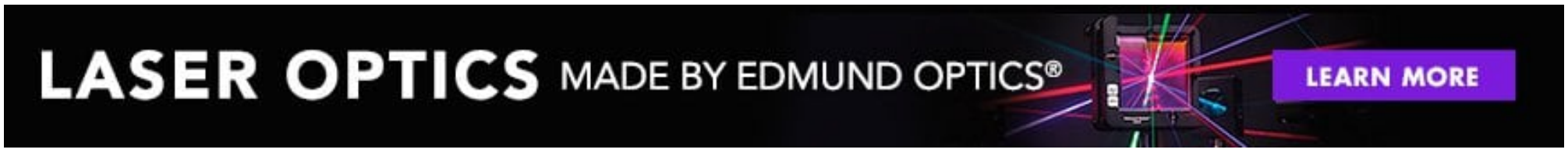

Technical Information

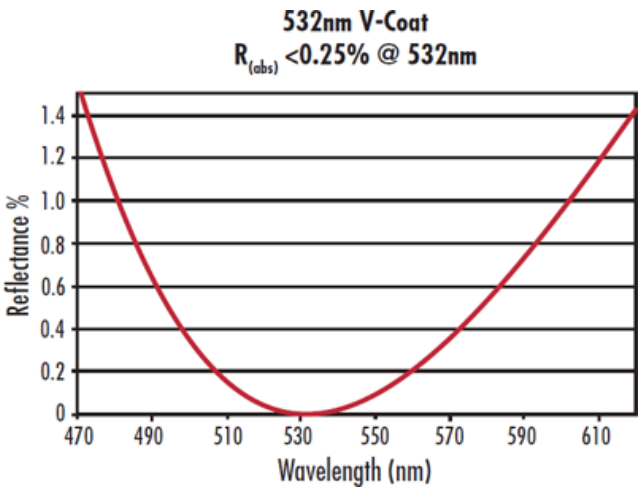

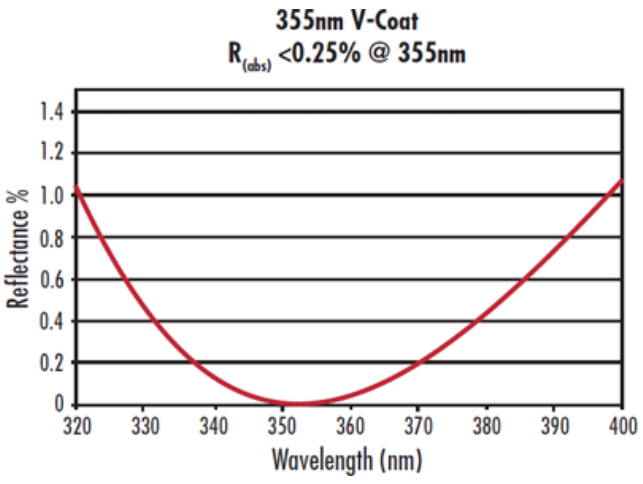

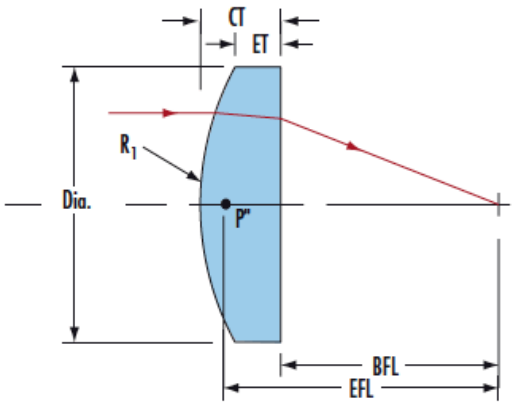

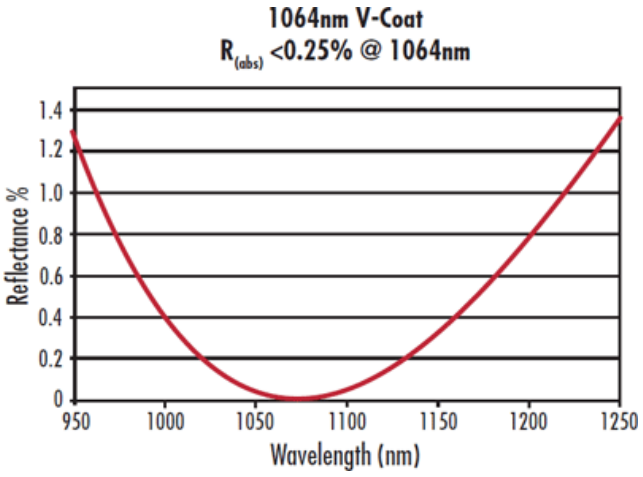

Custom

Edmund Optics offers comprehensive custom manufacturing services for optical and imaging components tailored to your specific application requirements. Whether in the prototyping phase or preparing for full-scale production, we provide flexible solutions to meet your needs. Our experienced engineers are here to assist—from concept to completion.

Our capabilities include:

- Custom dimensions, materials, coatings, and more
- High-precision surface quality and flatness
- Tight tolerances and complex geometries
- Scalable production—from prototype to volume

Learn more about our **custom manufacturing capabilities** or submit an inquiry **here.**