See all 53 Products in Family

3.74mm FL, High Resolution, f/1.6, Micro Video Lens

Stock **#11-323** **13 In Stock**

- 1 + **£70.00**

ADD TO CART

Volume Pricing	
Qty 1-49	**£70.00** each
Qty 50+	**£54.00** each
Need More?	Request Quote

Prices shown are exclusive of VAT/local taxes

Product Downloads

General

Series:
Long Working Distance Optimized Imaging Lenses

Note:
High Resolution

Type:
M12 Imaging Lens

IR Cut Filter:
Yes

Physical & Mechanical Properties

Iris Option:	Fixed
Length (mm):	24.04
Maximum Diameter (mm):	19.0
Outer Diameter (mm):	19

Optical Properties

Horizontal Field of View @ Max Sensor Format:	99
Maximum Image Circle (mm):	8.00
Resolution, On-Axis:	100 lp/mm @ 61.7% Contrast
Resolution, 0.7 Field:	100 lp/mm @ 56.8% Contrast
Resolution, Full Field:	100 lp/mm @ 48.2% Contrast
TV Distortion (%):	-22.4
Focal Length FL (mm):	3.74
Working Distance (mm):	400 - ∞
Aperture (f/#):	f/1.6
Lens Wavelength Range:	VIS (IR-Cut Filter)

Sensor

Maximum Sensor Format:	1/2"
Pixel Size (µm):	3.45

Threading & Mounting

Filter Thread:	N/A
Mount:	S-Mount (M12 x 0.5)

Regulatory Compliance

RoHS 2015:	Exempt
Certificate of Conformance:	View
Reach 242:	Contains SVHC(s)

Product Details

- Up to 2/3", S-Mount Lens
- Wide Field of View Board Camera Lens
- 1.68mm to 50mm Focal Length

Long Working Distance Optimized Imaging Lenses are designed for use in micro sensor board cameras. These lenses provide excellent image quality in a small, versatile package. Optimized to cover 2/3" sensor formats, they are an ideal choice for wide angle and close focus applications. Long Working Distance Optimized Imaging Lenses have 1.68 to 50mm focal lengths. All lenses are threaded for M12 x 0.5. Some models with Back Focal Distances (dimension "C") less than 4mm may be incompatible with some color cameras due to the camera's Bayer filter. We recommend such lenses for use with monochrome cameras only. Lenses are designed for the 400nm to 700nm range.

Note: A line of **M12 Imaging Lens Accessories** is available for these products.

Technical Information

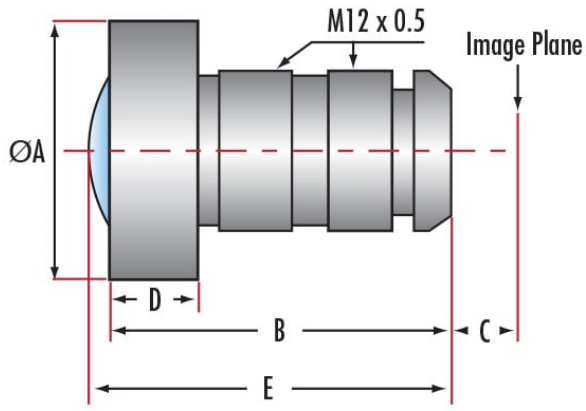

Infinite Conjugate M12 Imaging Lenses

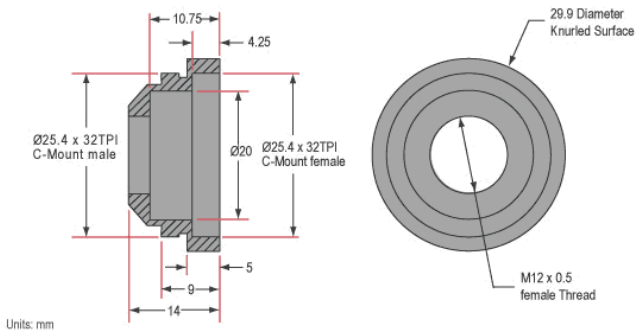

C-Mount Adapter (#53-675)

Stock #		Focal Length (mm)	Aperture (f/#)	A (mm)	B (mm)	C (mm)	D (mm)	E (mm)
No-IR Cut Filter	IR Cut Filter @650nm							
#59-776	#66-880	1.68	2.5	15.0	13.2	3.3	2.8	15.1
#56-774	#66-881**	1.74	2.8	21.0	19.61	3.33	3.2	N/A
#64-106	-	1.9	2.0	17.0	14.58	4.2	4.0	15.24
#55-569	#66-883	2.1	2.0	17.0	18.3	4.8	3.7	19.4
#57-681	#66-884***	2.5	2.5	17.0	19.1	4.4	3.7	20.3
#55-570	#66-885	2.9	2.0	15.0	17.4	5.2	5.8	17.8
#59-778	#66-886	3.0	2.0	14.0	15.3	5.3	3.9	N/A
#57-684	#66-890	6.05	1.8	15.0	15.6	8.0	6.0	N/A
#55-573	#66-891	6.37	2.4	14.8	13.12	5.3	3.3	N/A
#55-574	#66-892	8.0	2.5	15.0	13.5	5.8	3.0	N/A
#63-762	#59-779	10.1	2.8	15.0	13.4	6.1	3.2	N/A
#65-251	#64-107	10.4	2.8	14.0	8.93	6.4	4.0	N/A
#56-775	#66-893	12.0	2.0	14.0	12.1	6.2	4.0	N/A
#64-108	#66-894	16.0	2.0	14.0	14.4	8.0	4.5	N/A
#83-107	-	16.0	4.0	14.0	14.4	8.0	4.5	N/A
#56-776	#66-895	25.0	2.5	25.0	23.2	8.1	6.7	N/A
#59-780	#66-896	35.0	2.0	25.0	23.4	15.8*	6.0	N/A
#59-781	#66-897	50.0	2.5	27.0	52.8	4.1	8.0	N/A

***Note:** 35.0mm lens has a large flange focal length. Please make proper adjustments when mounting.
**#66-881, B(mm): 20.49
***#66-884, B(mm): 19.8, E(mm): 21

Stock #	Focal Length (mm)	Aperture (f/#)	A (mm)	B (mm)	C (mm)	D (mm)	E (mm)
#88-587	3.0	2.0	15.0	15.35	5.2	4	16
#88-588	3.5	2.5	15.0	15.4	6.9	4	N/A
#11-323	3.7	1.6	19	24.04	5.46	6.5	24.16
#11-324	4.0	1.8	20	23.8	5.01	7	24.72
#88-589	4.0	2.0	15.0	16.1	5.9	3.8	N/A
#88-590	4.3	2.0	22.0	20.96	5.5	6	21.93
#11-325	4.6	1.6	19	24.18	5.44	7	24.32
#88-591	4.6	2.0	12.0	13.1	1.9	6	N/A
#88-592	5.6	2.0	17.0	22.21	5.3	5	22.38
#89-750	6.0	2.0	14.0	15.1	6.7	3.93	N/A
#11-326	7.0	1.6	19	25.24	5.47	7.2	24.2
#89-751	8.0	2.0	15.0	14.4	6.8	4.5	N/A
#89-752	12.0	2.0	15.0	14.3	5.7	4.5	N/A

;