See all 24 Products in Family

TECHSPEC® 0.5X 2/3" GoldTL™ Telecentric Lens

#54-798 (0.5X)

Stock **#54-798** **17 In Stock**

- 1 + **£1,660.00**

ADD TO CART

Volume Pricing	
Qty 1+	**£1,660.00** each
Need More?	Request Quote

Prices shown are exclusive of VAT/local taxes

Product Downloads

General

Series:
GoldTL™ Series

Stock No. of Mounting Clamp:
#56-025 Sold Separately

Type:
Telecentric Lens

Special Type of Lens:
Focusable Telecentric

Physical & Mechanical Properties

Iris Option:	Fixed
Length (mm):	150.00
Length excluding Threads (mm):	150.00
Maximum Diameter (mm):	65.00
Weight (kg):	0.84

Optical Properties

Horizontal Field of View, 2/3" Sensor:	17.6mm
Horizontal Field of View, 1/1.8" Sensor:	14.4mm
Horizontal Field of View, 1/2" Sensor:	12.8mm
Maximum Image Circle (mm):	9.00
Numerical Aperture NA, Object Side:	0.042
Resolution, Image Space MTF @ f/10:	>55% @ 40 lp/mm
Number of Elements (Groups):	8 (5)
Typical Telecentricity @ 588nm (°):	<0.025
Typical Distortion @ 588nm (%):	0.015
Primary Magnification PMAG:	0.5X
Telecentric Lens Magnification:	0.50
Working Distance (mm):	117 - 142
FOV @ Max Sensor Format, H x V (mm):	17.6 x 13.2
Aperture (f/#):	f/6 - f/25
Coating:	λ/4 MgF_2
Depth of Field (mm):	±2.1 at f/10 (20% @ 20 lp/mm)
Magnification:	0.5X
Lens Wavelength Range:	VIS

Sensor

Maximum Sensor Format:	2/3"
Pixel Size (µm):	2.74

Threading & Mounting

Filter Thread:	M58 x 0.75 (Female)
Mount:	C-Mount

Regulatory Compliance

Certificate of Conformance:	View

Product Details

- High Resolution Telecentric Lens for Measurement and Gauging
- Up to 5 MegaPixels, 3.45µm Pixel Size Sensors
- Up to 2/3", C-Mount Telecentric Lens
- Magnification from 0.06X to 1X

TECHSPEC® GoldTL™ Telecentric Lenses were designed specifically for machine vision and metrology applications. The unique focusable design allows for working distance adjustment, while still providing <0.2° telecentricity.

These lenses also feature high resolutions, low distortions, and are available for ½" or 2/3" sensors. TECHSPEC® GoldTL™ Telecentric Lenses have a front filter thread for easy integration of **color filters**, **polarizers** or other mounted components. Both the iris and focusing adjustment positions can be fixed by set screws to remain secure in high vibration environments.

Technical Information

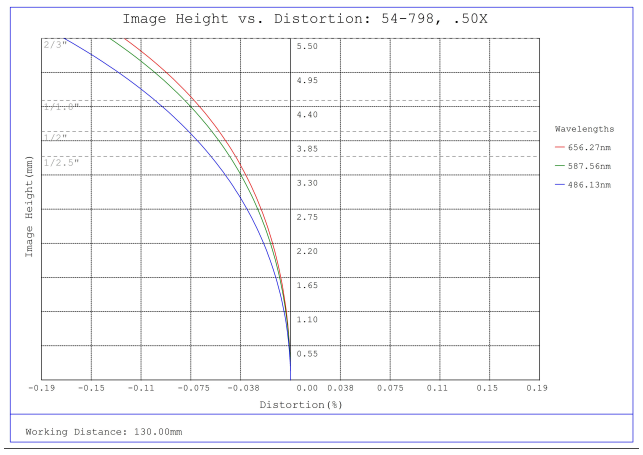

#54-798, 0.5X 2/3" GoldTL™ Telecentric Lens, Distortion Plot

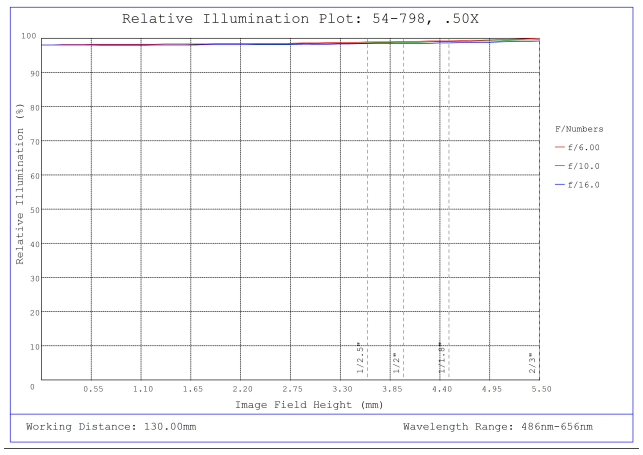

#54-798, 0.5X 2/3" GoldTL™ Telecentric Lens, Relative Illumination Plot

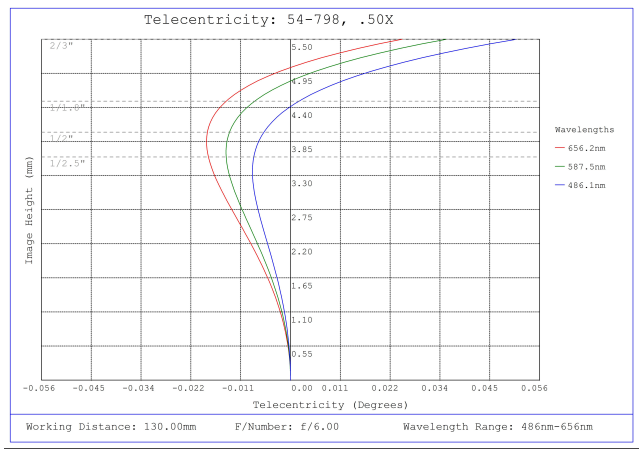

#54-798, 0.5X 2/3" GoldTL™ Telecentric Lens, Telecentricity Plot

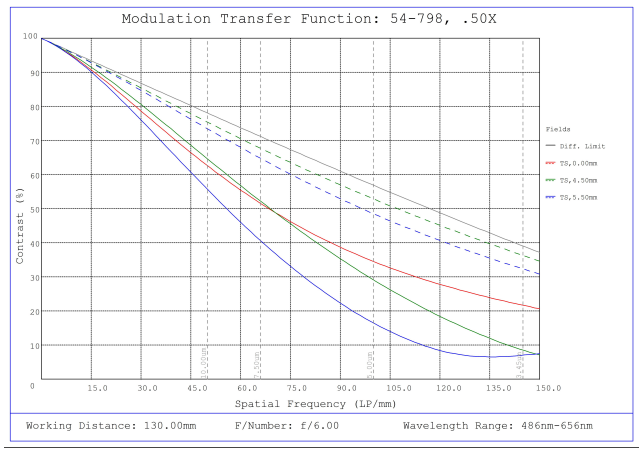

#54-798, 0.5X 2/3" GoldTL™ Telecentric Lens, Modulated Transfer Function (MTF) Plot, 130mm Working Distance, f6

#54-798, 0.5X 2/3" GoldTL™ Telecentric Lens, Depth of Field Plot, 130mm Working Distance, f6

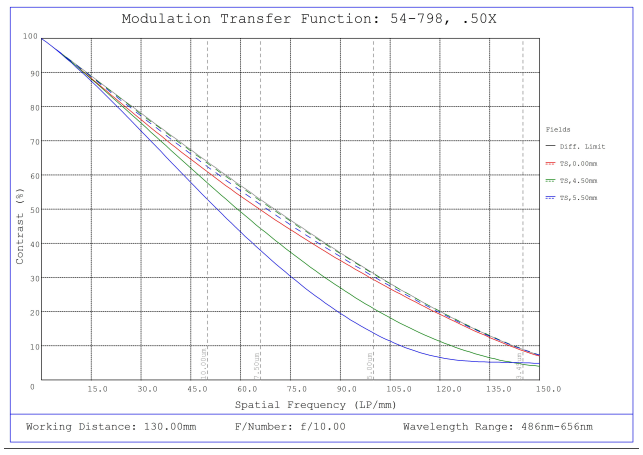

#54-798, 0.5X 2/3" GoldTL™ Telecentric Lens, Modulated Transfer Function (MTF) Plot, 130mm Working Distance, f10

#54-798, 0.5X 2/3" GoldTL™ Telecentric Lens, Depth of Field Plot, 130mm Working Distance, f10

Stock No.	A	B	C	D	E	F	G
#56-024	88mm	16mm	34mm	94mm	120mm	101.6mm	50mm
#56-025	85mm	17.5mm	32.5mm	91mm	120mm	101.6mm	48.5mm
#56-026	103mm	—	39.5mm	107mm	103mm	90mm	55.5mm
#56-027	134mm	—	55mm	148mm	134mm	122mm	81mm

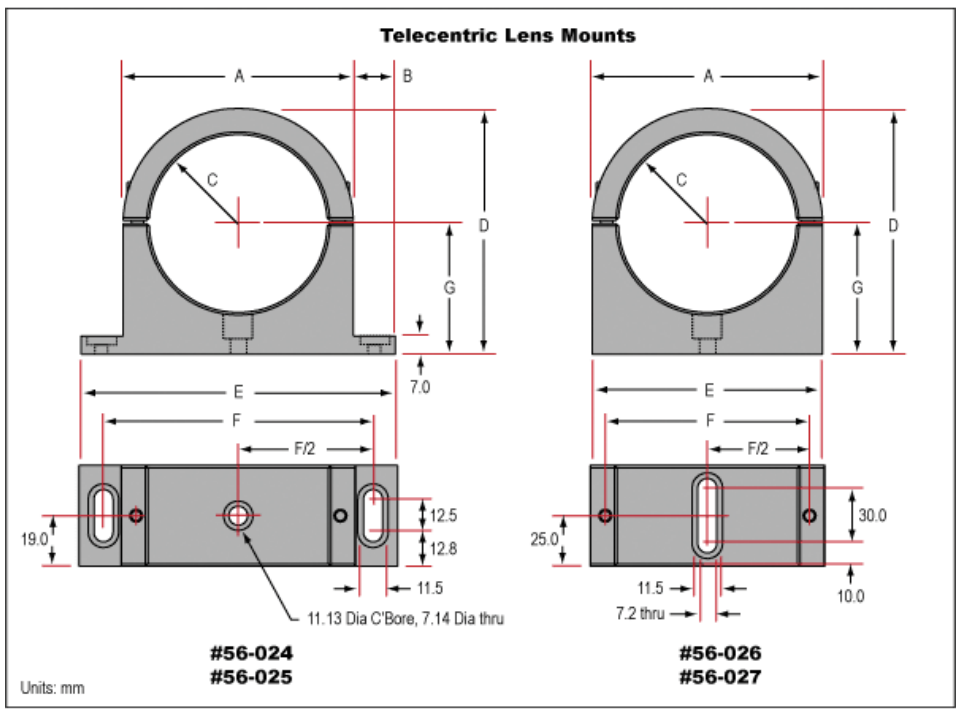

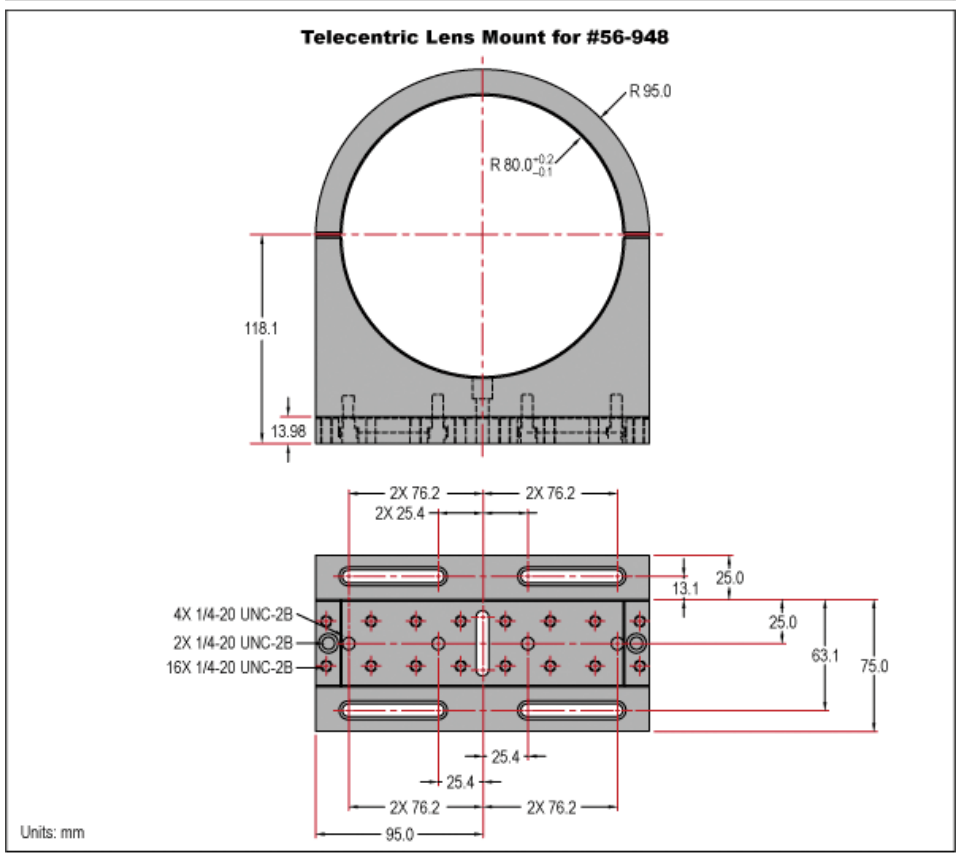

;