TECHSPEC® 0.5mm Thick, C-Mount Brass Spacer Ring

Brass Spacer Ring

Stock **#03-631** CONTACT US

- 1 + **£9**.00

ADD TO CART

Volume Pricing	
Qty 1-4	**£9.00** each
Qty 5-9	**£8.40** each
Qty 10-25	**£8.00** each
Need More?	Request Quote

Prices shown are exclusive of VAT/local taxes

Product Downloads

SPECIFICATIONS

General

Function:	Spacer Ring

Physical & Mechanical Properties

Thickness (mm):	0.50
Outer Diameter (mm):	29.0
Inner Diameter (mm):	25.5

Threading & Mounting

Thread Type:	C-Mount

Regulatory Compliance

RoHS 2015:	Exempt
Certificate of Conformance:	View
Reach 247:	Contains SVHC(s)

PRODUCT DETAILS

- Fit Over Male C, S, and T-Mount Threads
- Wide Range of Thicknesses Available for Accurate Spacing
- Spacer Ring Kits Available

TECHSPEC® C, S, and T-Mount Brass Spacer Rings fit over the male threads on our C, S, and T-Mount components, extending the overall length of the system. These spacer rings are ideal for making incremental adjustments to component spacing within an optical system. TECHSPEC® C, S, and T-Mount Brass Spacer Rings are available in thicknesses ranging from 0.25mm to 2.0mm, ensuring that application specific spacing is available. Kits of **C-Mount** and **S-Mount** Spacer Rings with 2 of each size can be found under the "Accessories" tab for this product. These spacer rings can be combined in multiple configurations to achieve the desired spacing distance.
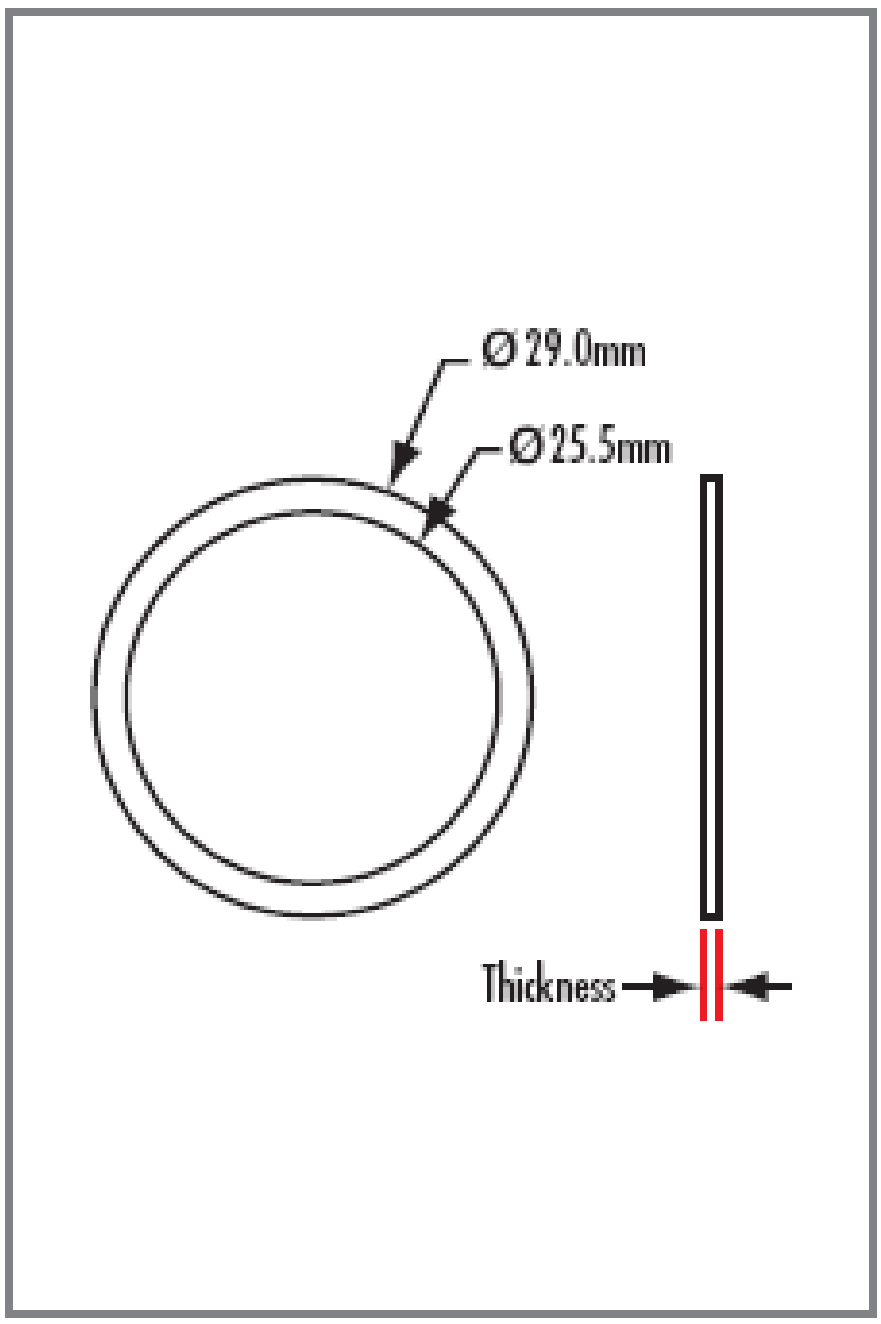
TECHNICAL INFORMATION