NOTES:

1. SUBSTRATE:
   GRADE A FINE ANNEALED
   SCHOTT: N-BK7 517/642
2. ROHS COMPLIANT
3. CENTERING TOLERANCE (AT 587.6nm):
   BEAM DEVIATION (HALF ANGLE): <1 ARCMIN
4. COATING (APPLY ACROSS COATING APERTURE)

   S1 & S2: YAG-BBAR
   R(ABS) < 0.25% @ 532nm @ 0° AOI
   R(ABS) < 0.25% @ 1064nm @ 0° AOI
   R(AVG) < 1.0% FROM 500-1100nm @ 0° AOI

5. FINE GRIND SURFACE
6. POWER, IRREGULARITY, AND SURFACE QUALITY SPECIFICATIONS APPLY ACROSS CLEAR APERTURE
7. FOCAL LENGTH (EFL): 24.00mm±1%
   BACK FOCAL LENGTH (BFL): 23.01mm
8. PROTECTIVE BEVEL AS NEEDED
9. DESIGN WAVELENGTH: 587.6nm
10. BLACKENED SURFACE

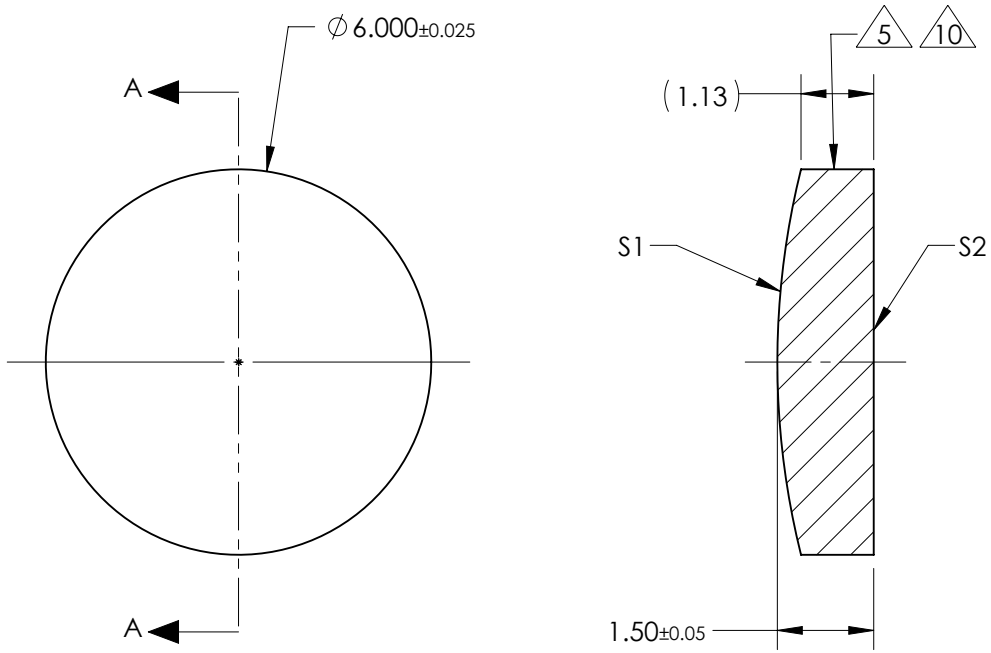

SECTION A-A

FOR INFORMATION ONLY:
DO NOT MANUFACTURE PARTS TO THIS DRAWING

	S1	S2
SHAPE	CONVEX	PLANO
RADIUS	12.40	INFINITY
SURFACE QUALITY	40 - 20	40 - 20
MIN CLEAR APERTURE	∅5.40	∅5.40
MIN COATING APERTURE	∅5.00	∅5.00
POWER AT 632.8nm	3.00 RINGS	3.00 RINGS
IRREGULARITY AT 632.8nm	0.50 RINGS	0.50 RINGS

SPECIFICATIONS SUBJECT TO CHANGE WITHOUT NOTICE
DIMENSIONS ARE FOR REFERENCE ONLY

Edmund Optics®

THIRD ANGLE PROJECTION		TITLE	6.0mm Dia. x 24.0mm FL, YAG-BBAR, Inked, Plano-Convex Lens
ALL DIMS IN	mm	DWG NO	88803INK
			SHEET 1 OF 1